Rev. 02-19.04.2021

Emys

The **Guide**

English

Download the
Technical sheet
at:
www.tartadesign.it

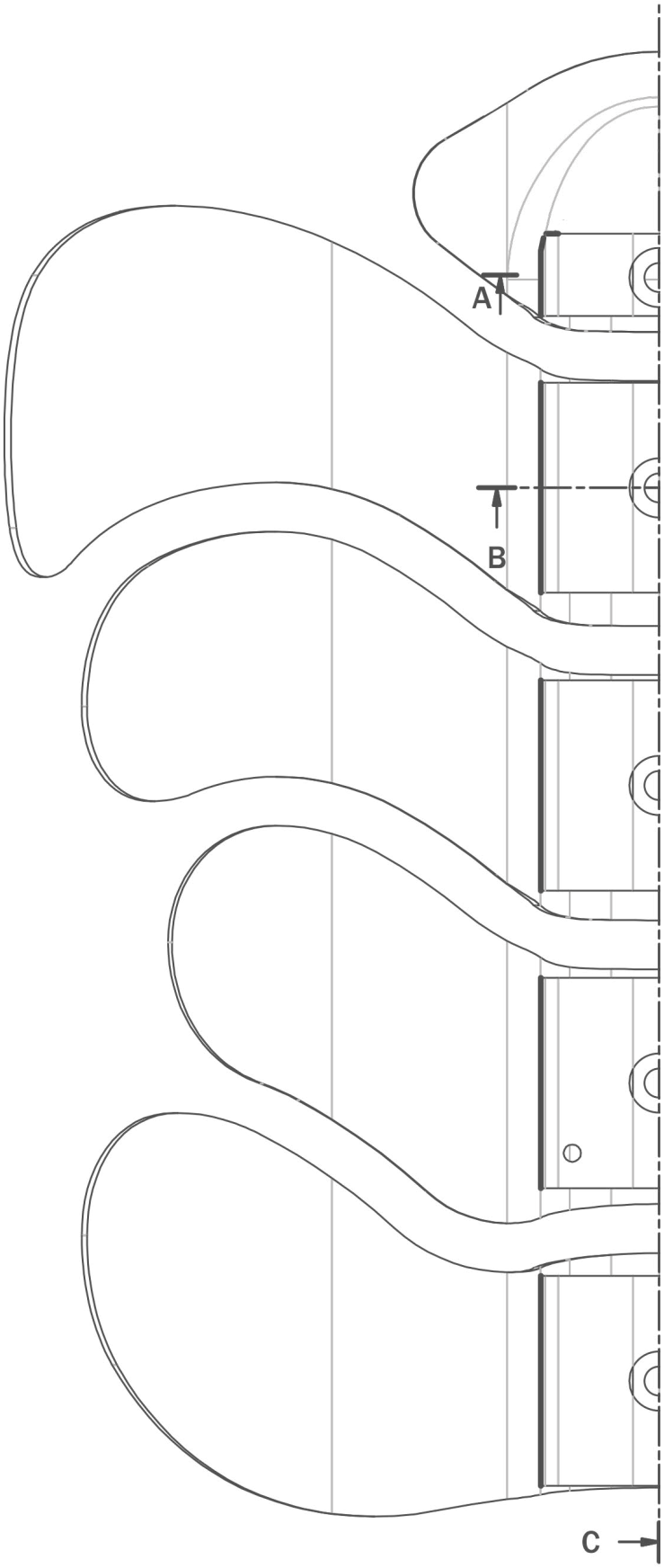

TARTA®
RESHAPES LIFE

GMN CODE: 805577471EMYSKU

Emys

The **Guide**

Index

Adjustable clamp for folding wheelchairs ..... p. 2
Backrest height adjustability ..... p. 5
Backrest inclination adjustability ..... p. 6
How to bend the staves..... p. 6
Adjustable clamp for rigid frame wheelchairs ..... p. 7
Backrest height adjustability ..... p. 8
Backrest inclination adjustability ..... p. 8
Backrest installation ..... p. 9
Safety rubber band installation ..... p. 10
Give a shape to Emys ..... p. 10
Adjust the flexibility of the backrest ..... p. 11
Adjust the twisting of the backrest..... p. 11
Backrest removal ..... p. 12
Warnings ..... p. 13
Contraindications ..... p. 14
Cleaning and maintenance ..... p. 14
Symbol key ..... p. 14
Disposal ..... p. 15
24-month limited guarantee ..... p. 15

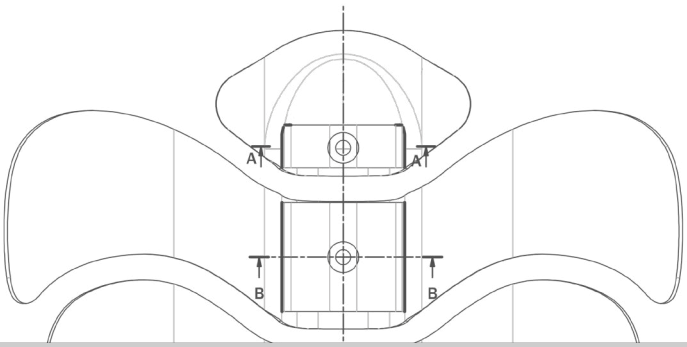

Adjustable clamp for folding wheelchairs

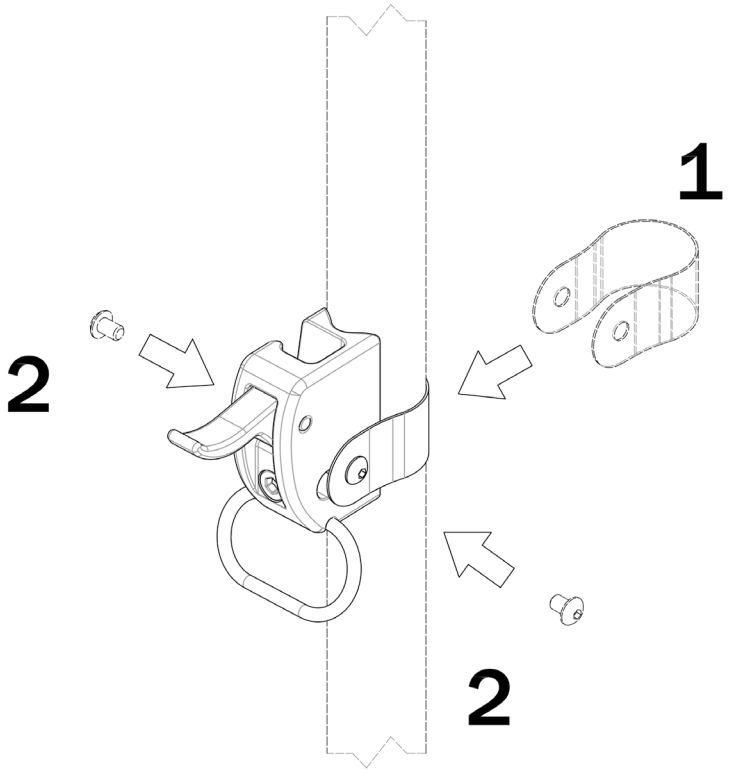

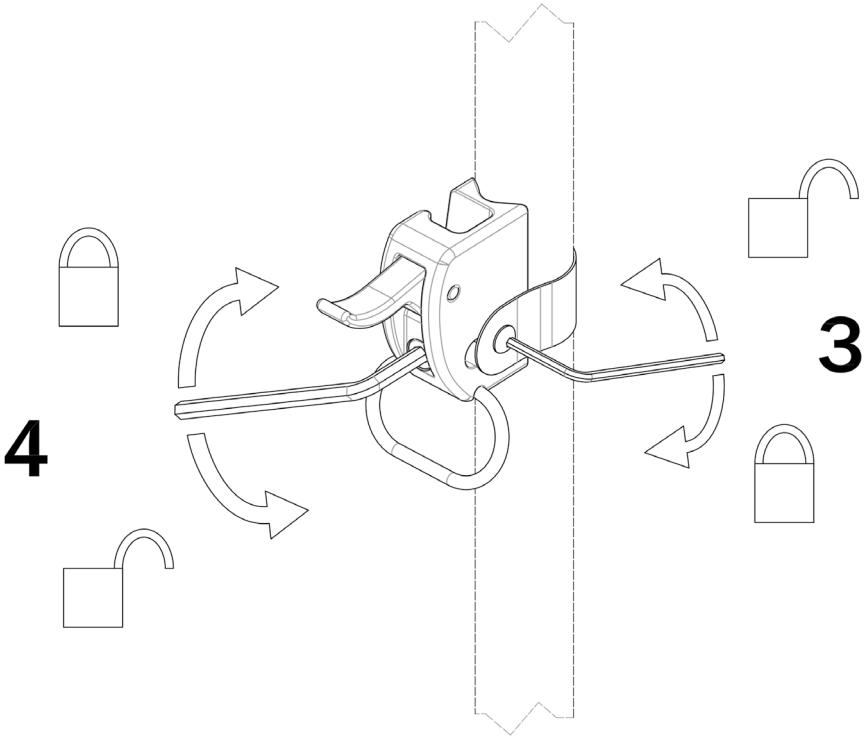

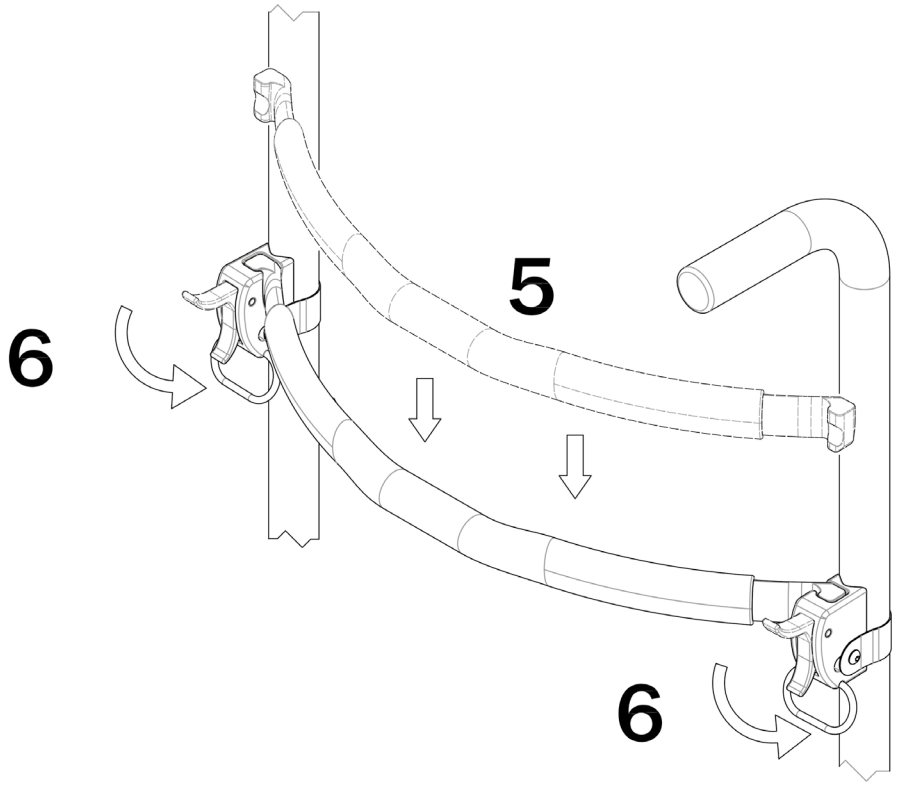
5
6
6

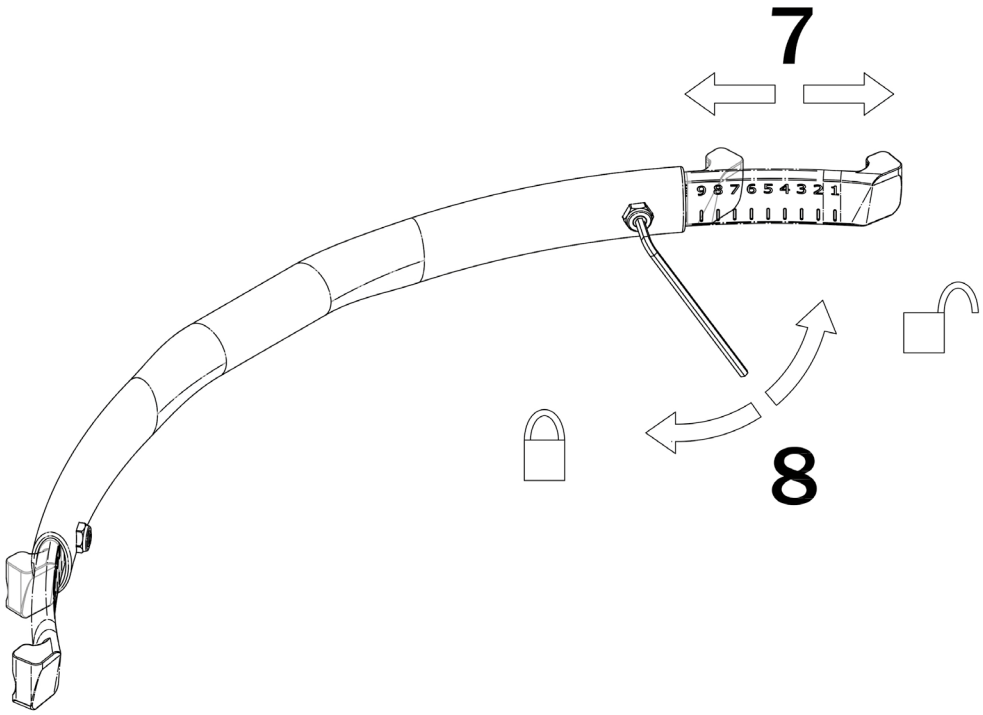
7
9 8 7 6 5 4 3 2 1
8

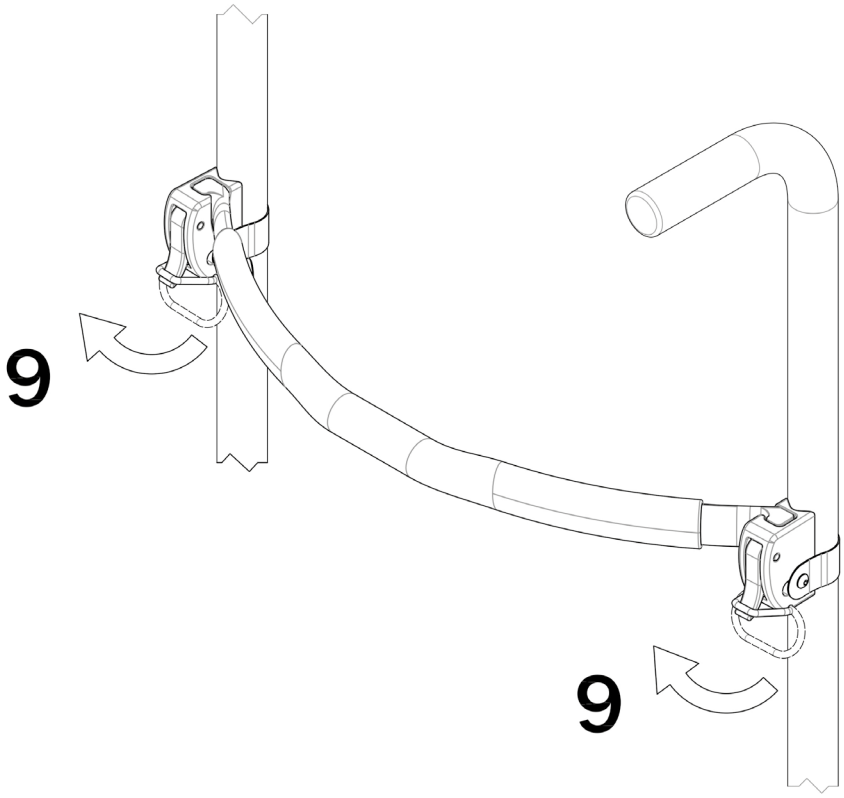
9
9

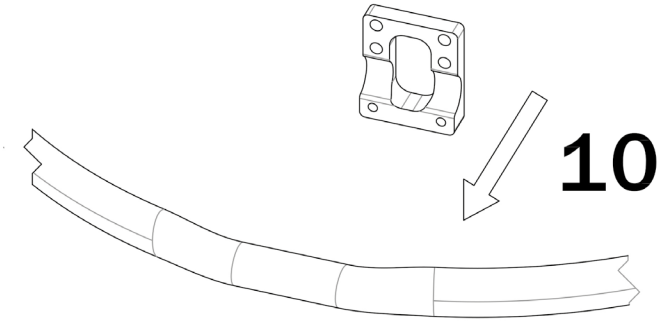
10

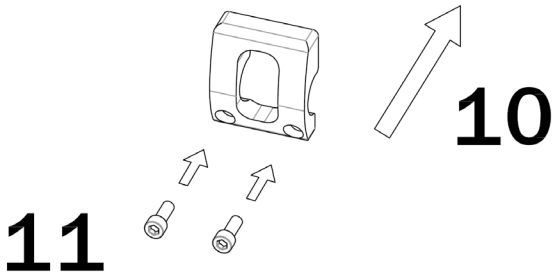
10
11

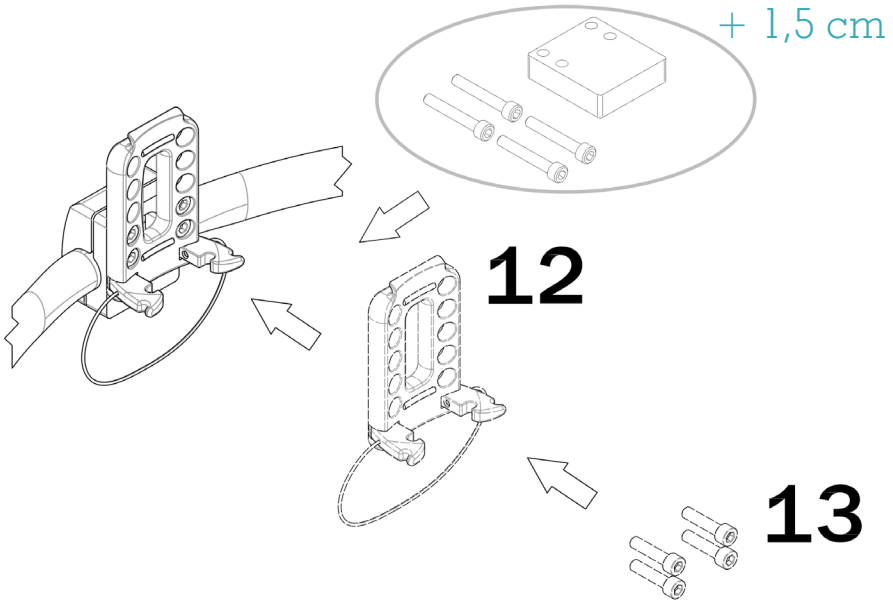

Backrest height adjustability

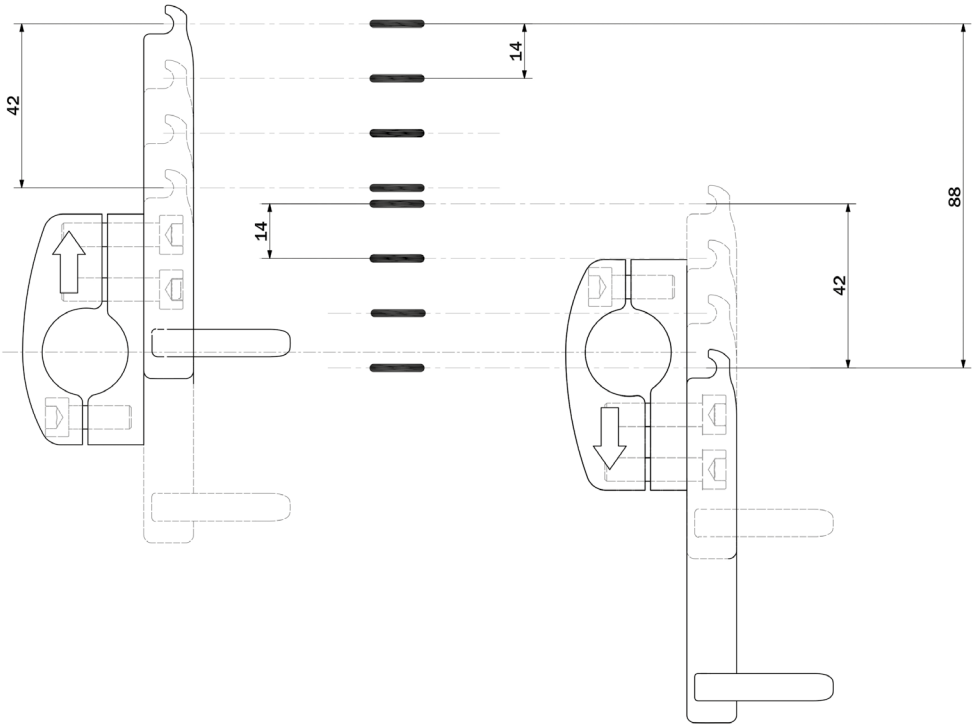

Backrest inclination adjustability

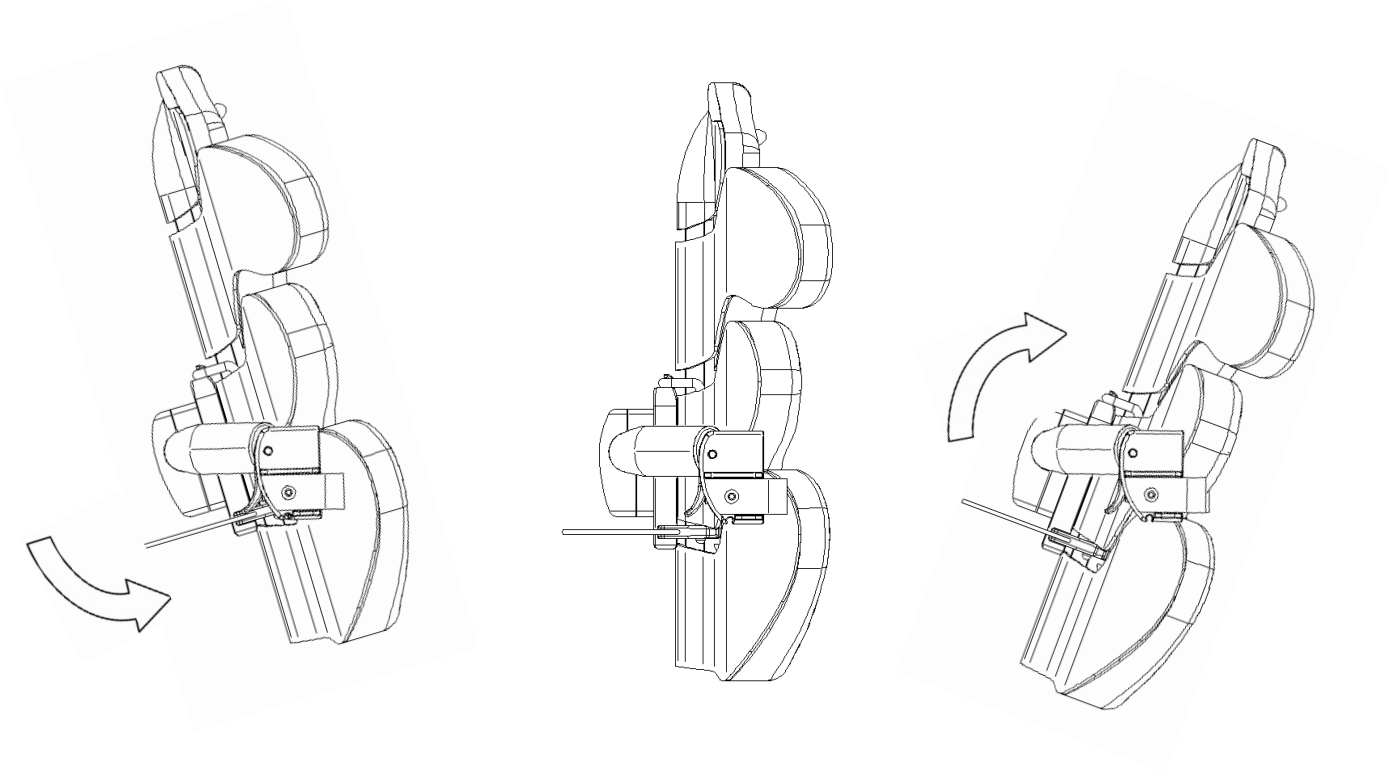

How to bend the staves

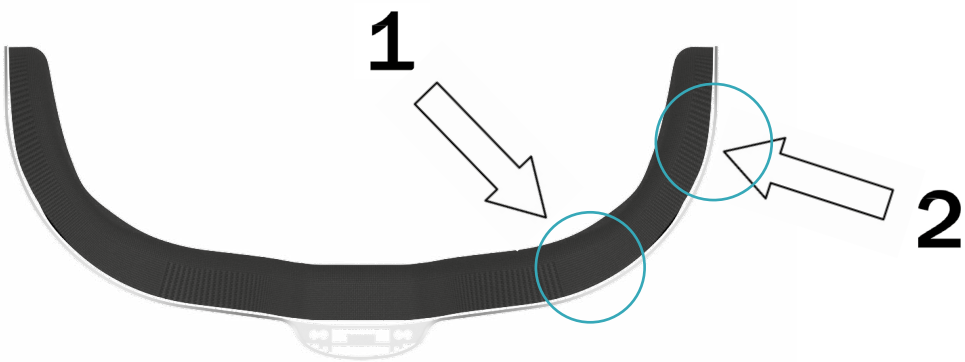

Adjustable clamp for rigid frame wheelchairs

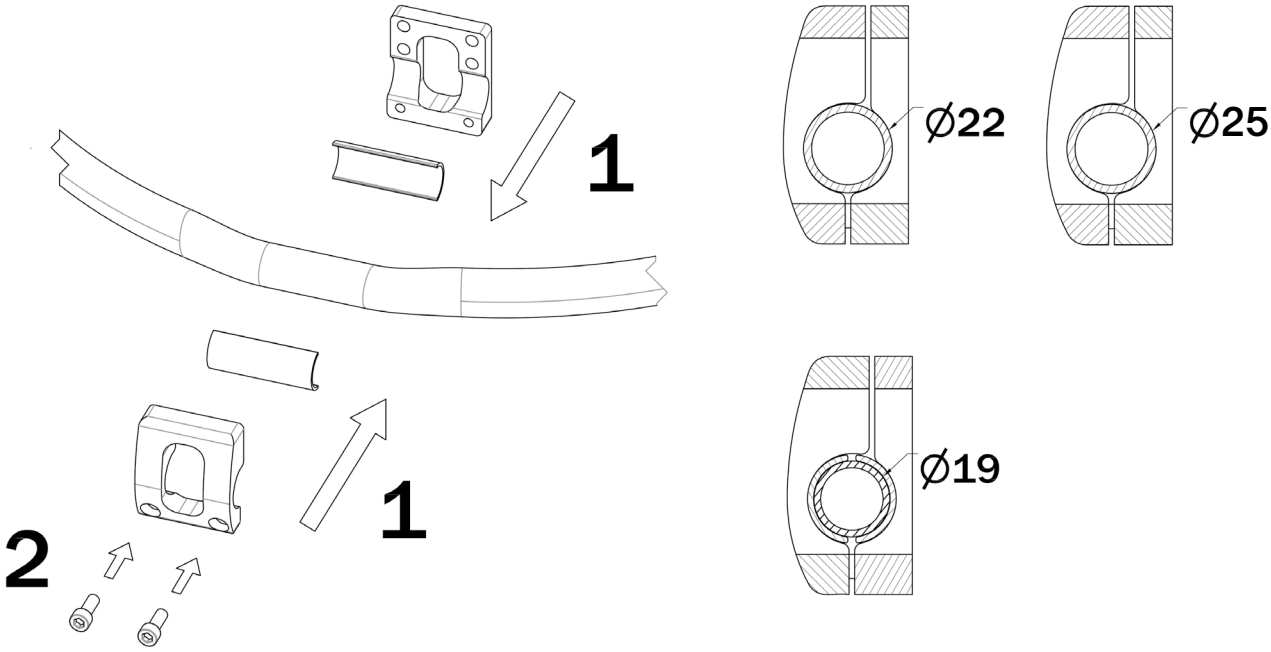

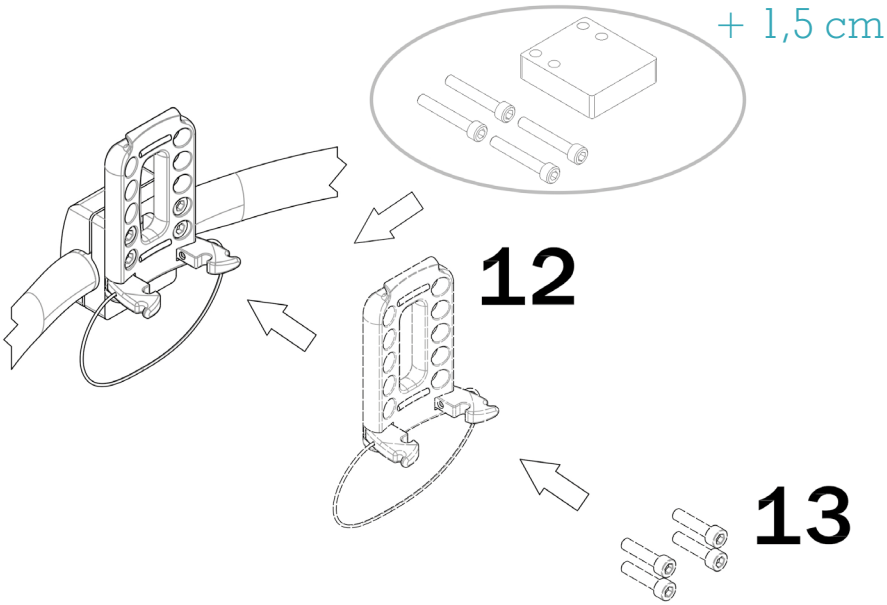

Backrest height adjustability

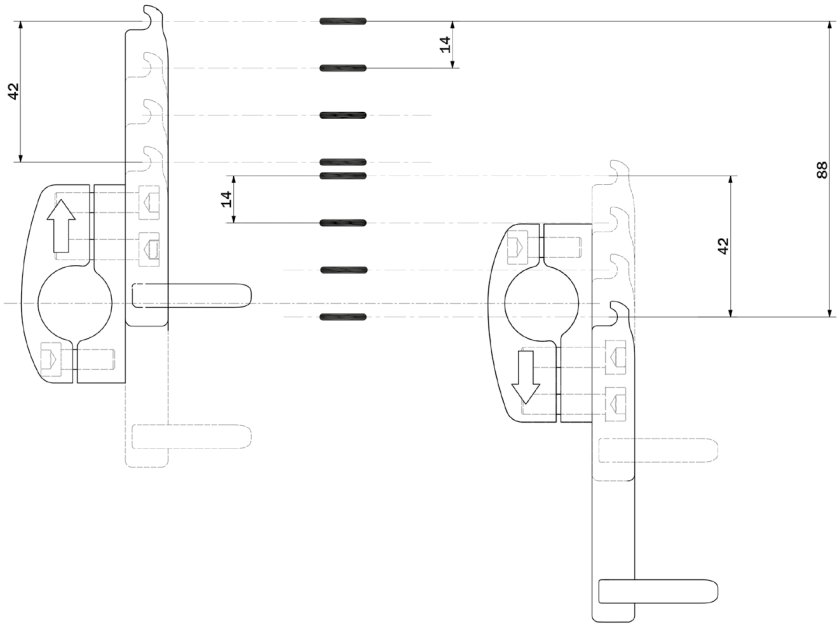

Backrest inclination adjustability

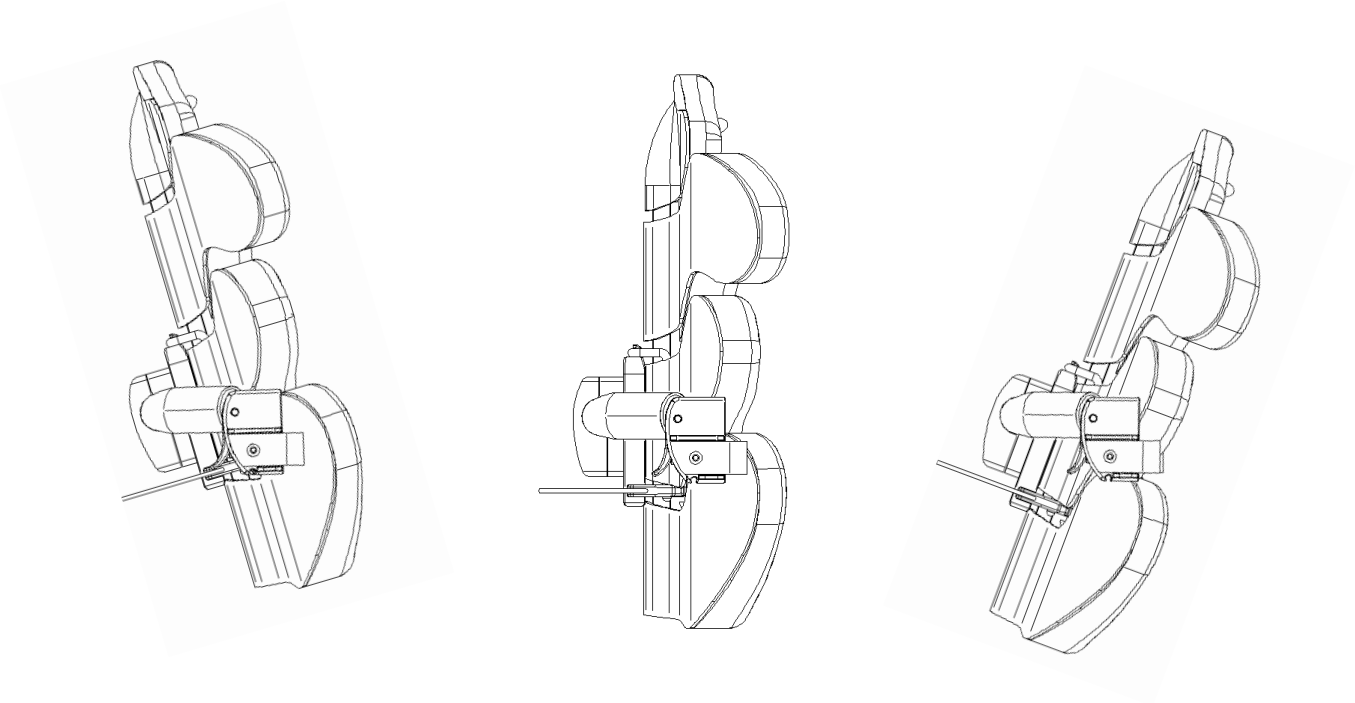

Backrest installation

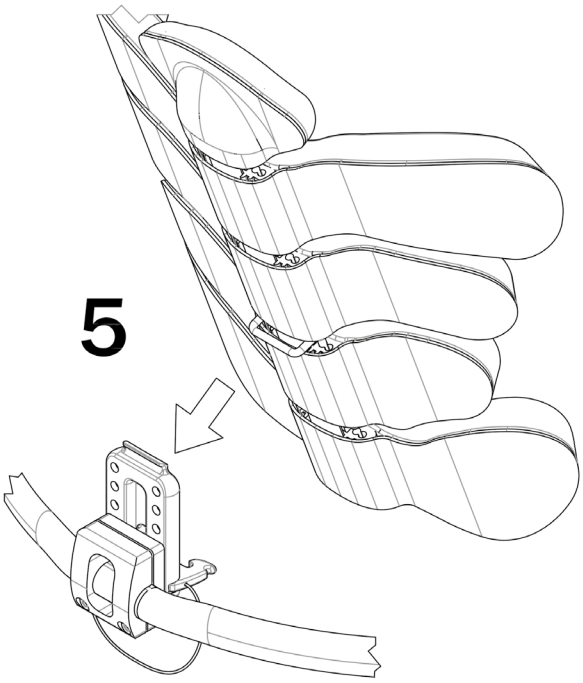

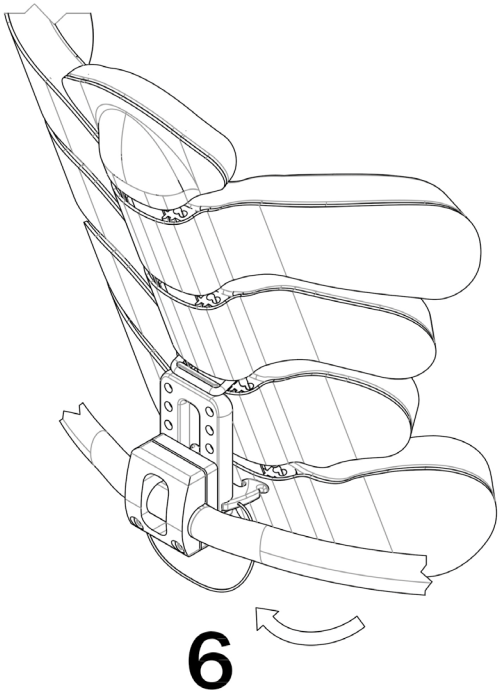

Safety rubber band installation

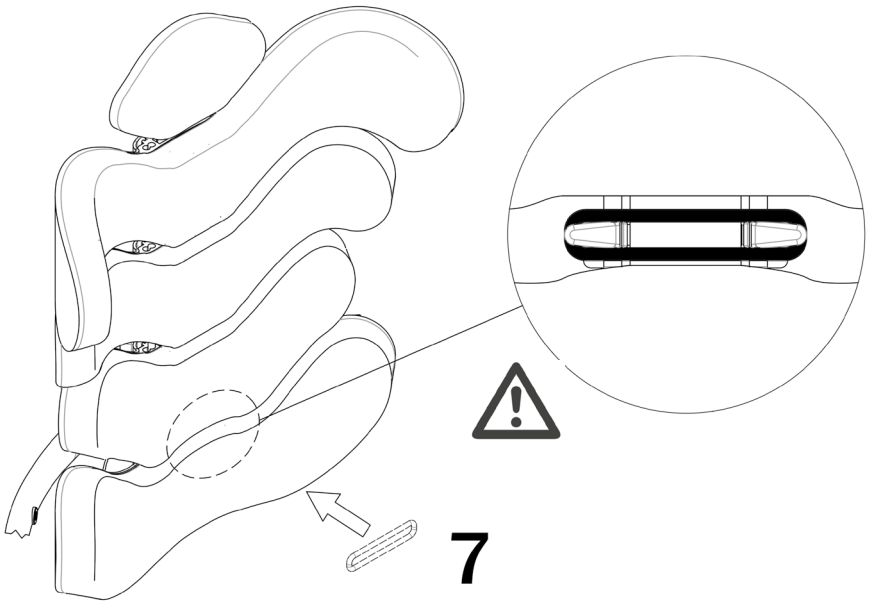

Give a shape to Emys

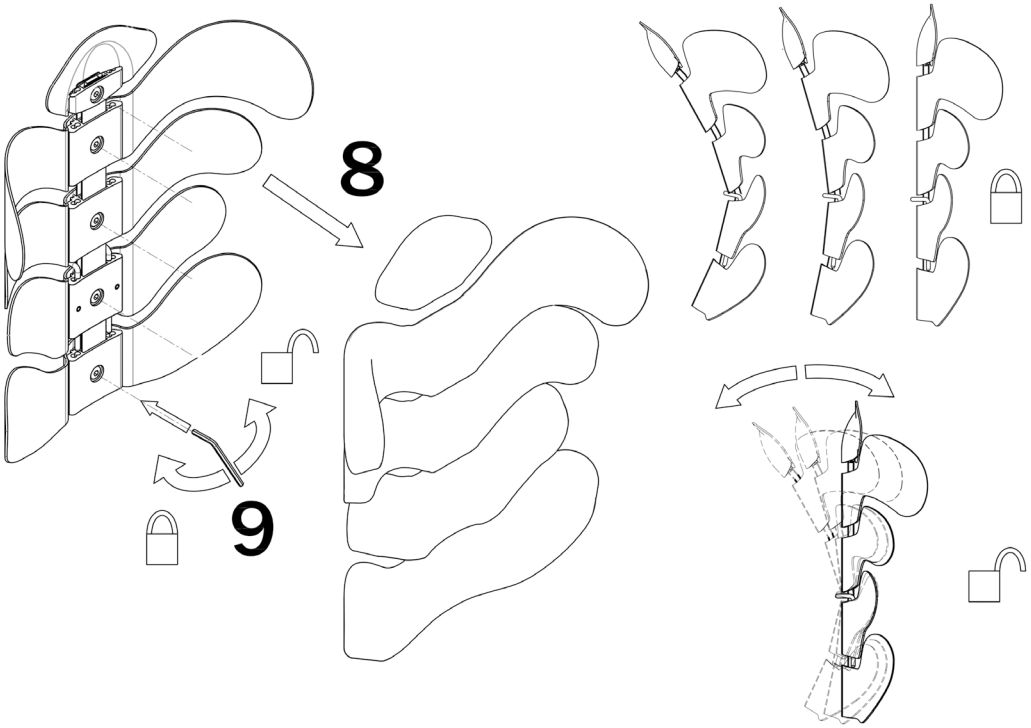

Adjust the flexibility of the backrest

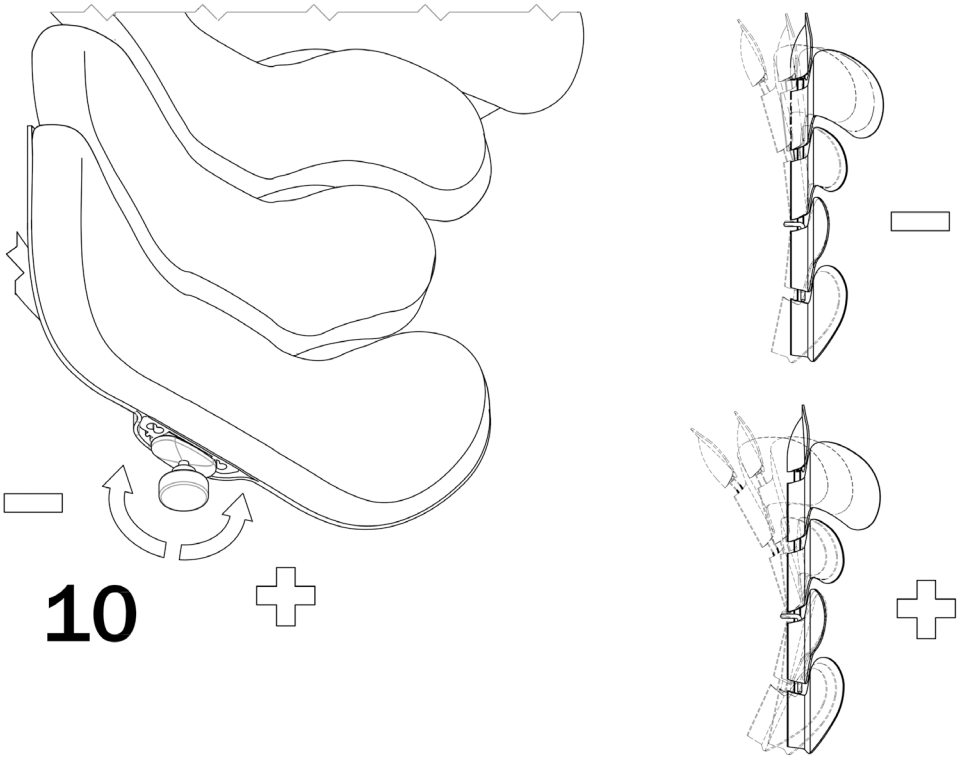

Adjust the twisting of the backrest

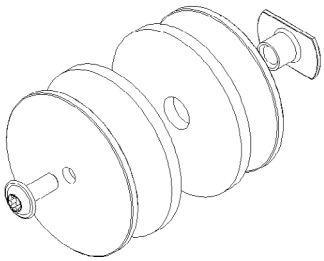

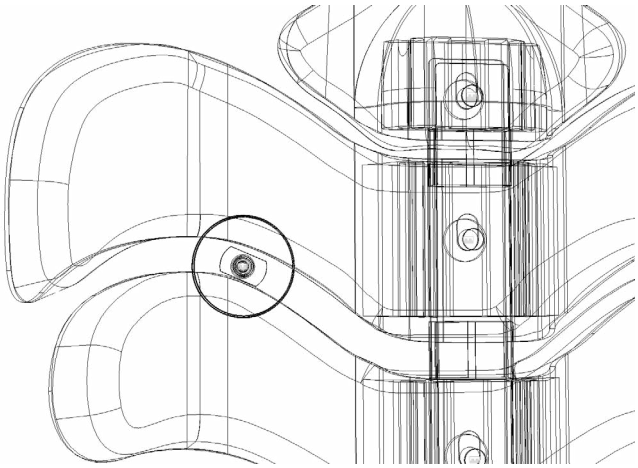

Backrest removal

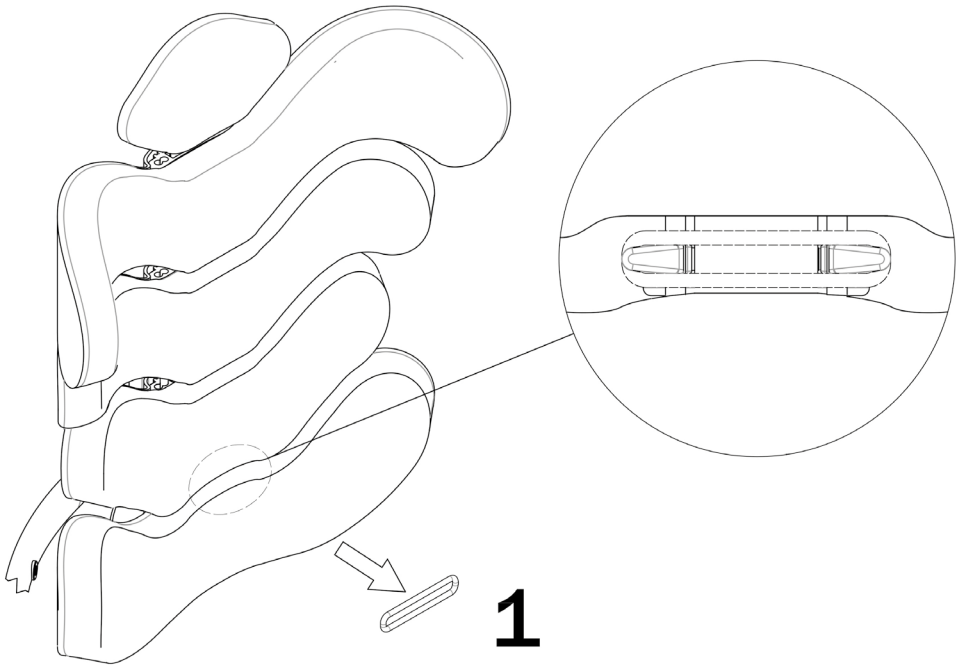

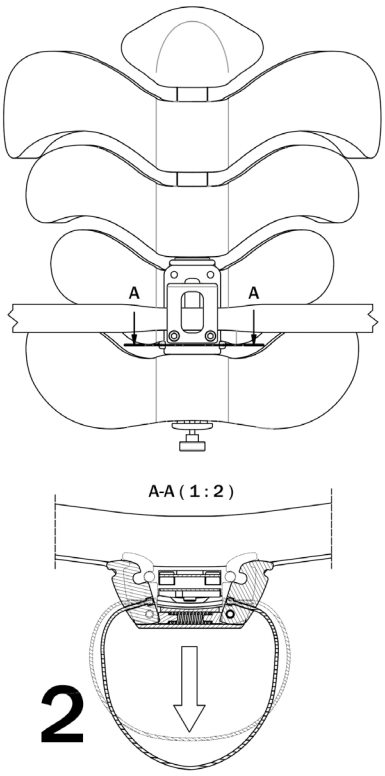

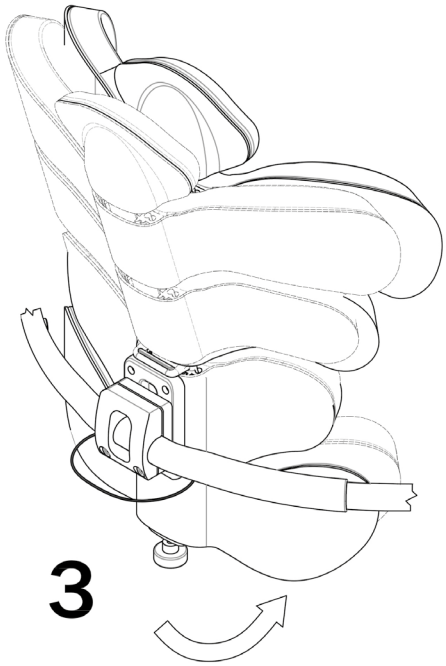

Warnings

- The device must be prescripted only by a specialist doctor.
- The specialist doctor has the reponsibility to:
  1. prescribe the device
  2. prescribe the most suitable size of device for the user
  3. prescribe the appropriate use and time of use of the device for the user
- In case of the device not being complete or being damaged, please avoid using it and immediately contact the orthopaedic centre that provided it.
- The installation of an EMYS backrest on a wheelchair may affect its centre of gravity and cause it to overturn, which could potentially lead to injuries. For this reason, after having installed the backrest, the stability of the wheelchair must be checked while it is in motion on an incline of between 12° and 15° in all directions (forwards, backwards, to the left and to the right). Always consider the possible need to equip the wheelchair with anti-tipping wheels or with an amputee plate in order to improve the stability.
- Do not use EMYS to push or lift the wheelchair. Incorrect use may cause the backrest to to accidentally detach from the wheelchair.
- After having carried out the required adjustments, make sure that the supports sre sufficiently tight and the backrest is ready for use.
- Periodically check the mechanical parts of the device that can loosen or misalign due to use; in case of a similar situation, please contact an authorised technician to perform maintenance on your EMYS.
- EMYS must be regulated and installed only by accredited health workers, orthopaedic technicians or personnel authorised by Tarta Design srl.
- If possible,periodically change the user's position in order to avoid excessive pressure on some parts of the body and to allow a more comfortable sitting position.Avoid contact with naked flames or glowing objects: they could damage the device and cause injury to the user.
- Avoid exposing the device to direct sunlight.
- Avoid contact with sharp and/or pointed objects or instruments that might damage the physical integrity of the device, especially the padding.
- Before seating the user on the device, check that the temperature of the parts with which he will come into contact is appropriate (neither too hot nor too cold).
- No modifications should be made to the structure or the components of the device by anyone other than a qualified technician.
- For correct installation the wheelchair must be fitted with a tensional backrest.

- **The device has been designed to be able to support a user with a maximum weight of 120 kg.**

Contraindications

- Do not use in direct contact with the skin; it is advisable for the user always to wear a garment that makes it possible to avoid direct contact with the material of which the device is made in order to avoid the possibility of any allergic reaction.
- Do not use in contact with any injured areas.
- Do not use in the event of intolerance to the materials of which the device is made.

Failure to comply with the instructions provided above could cause serious injury to the user himself or to other people.

Cleaning and maintenance

- The individual parts of the device can be cleaned with a soft cloth soaked in water and well wrung out.
- Do not immerse the device in water.
- Do not carry out maintenance on the device: if damaged, contact your orthopaedic centre.
- The padding can be washed in a washing machine at 30°C.

Symbol key

CE	CE MARK - Complies with Directive 93/42/EEC and subsequent modifications
	This symbol identifies the manufacturer and must be accompanied by the manufacturer's name and address
REF	Product code
LOT	Production batch
	Warning! Before using the device read the instructions for use
LATEX	Latex free

Disposal

- The device can be included in solid urban waste complying with local laws on the matter of waste recycling.

24-month limited guarantee

Each EMYS is carefully checked and tested in order to provide the highest level of performance. Each EMYS is guaranteed to be free of defects in manufacture and materials for a period of 24 months from the date of purchase, assuming that it has been subjected to normal usage. Should a defect in manufacture or material be discovered within 24 months of the original purchase date, Tarta Design srl undertakes, at its sole discretion, either to repair or to replace the product without charge. This guarantee does not cover holes, rips or burns.

Any complaints or repairs should be referred to the nearest authorised supplier. Except for the guarantees expressly stated herein, all other guarantees are excluded, including all implied guarantees of merchantability or suitability for specific purposes. Guarantees except as described above are excluded. The application of the guarantee is limited to the repair or replacement of the goods. In no event may injury caused by breakage of the product under guarantee result in claims for consequential damages nor may claims exceed the value of the non-conforming goods sold.

Questions?
Info?
Help?

Visit our website:
www.tartadesign.it

or **contact us** at:
info@tartadesign.it

Tarta Design srl

Via Cotonificio, 56
33037 Pasian di Prato
Udine - Italy
T +39 0432 722 533
F +39 0432 542 920

www.tartadesign.it
info@tartadesign.it

TARTA RESHAPES LIFE	**DICHIARAZIONE DI CONFORMITA'** **Allegato IV, Regolamento 2017/745, MDR** ***DECLARATION OF CONFORMITY* - (Annex IV MDR)**

Il Fabbricante - *The manufacturer*

TARTA DESIGN S.r.l.

Via del Castello, 73
33043 - Cividale del Friuli (UD)
Italy

CE

DICHIARA - DECLARES

Sotto la propria responsabilità che - *Under his own responsibility that the*
il Dispositivo Medico - *the Medical Device*

	Identificazione del dispositivo medico ***(Medical Device Identification)***		
Etichetta - Label	TARTA EMYS	☐	*EMYS*
Classificazione (Secondo Allegato VIII MDR) *Classification (According to Annex VII MDR)*	Classe - *Class* Regola - *Rule*	I I	

- ✓ È conforme al Regolamento 2017/745 (MDR) e successive modifiche *(MDD).*
  Complies with Regulation 2017/745 (MDR) and subsequent amendments (MDD).
- ✓ È conforme alle norme tecniche applicabili.
  Complies with applicable technical standards .

Cividale del Friuli (UD) 13 APR. 2021

Legale rappresentante o persona autorizzata all'emissione
Legal representative or authorized person

TARTA DESIGN S.r.l. a socio unico

Periodo di validità di questa Dichiarazione di Conformità – ***Validity period of this Declaration of Conformity***
Questo documento non ha scadenza salvo modifiche apportate al prodotto o al processo
This document does not expire unless changes are made to the product or